TEMPORARY STRUCTURES

FORMWORK

Concrete formwork is used as a temporary **structure** to support the fresh (i.e., uncured) concrete until it is strong enough to support itself and the applied loads. Formwork is a very significant portion of the project, as much as 60% of the final cost of the finished concrete project.

Concrete Slab – Formwork collapsed

Formwork Requirements & Economy:

1. **Rigid** – to prevent bulging or movement from pouring wet concrete.
2. **Tight joints** – to prevent wet concrete from leaking.
3. **Simplicity** – easy erection and dismantling. Bond-breaking agents such as grease is typically applied to the form faces to prevent concrete "sticking."
4. **Standardized sizes** – allowing reuse.
5. **Form finish** – to achieve desired texture and appearance of finished product.

Design Loads on Forms:

The American Concrete Institute (ACI) publishes a document called "*ACI 347 – Guide to Formwork for Concrete*."

1) Form Dead Loads – the actual weight of the forms, plus the weight of fresh (i.e., wet) concrete.

2) Form Live Loads – the weight of workers, equipment and material storage. The minimum live load is 50 psf, while a live load of 75 psf should be used if motorized buggies are used.

3) Primary Factors Affecting Concrete Lateral Pressure on Forms:

a. Concrete Density
b. Concrete Temperature, T at the time of placing (Deg. F)
c. Vertical Concrete Placement Rate, R (feet per hour)
d. Concrete Placement Height, h (feet)

4). Lateral Loads on Formwork – wet concrete is like water – it exerts a lateral pressure which increases with the depth of the form.

5). Types of Formwork – There are three main types of formwork that you need to be aware of .

a. Horizontal (Floor/Slab) Formwork
b. Beam Formwork
c. Vertical (Column/Wall) Formwork

Horizontal (Floor/Slab) Formwork

Horizontal forms must be designed and constructed to safely support the vertically applied dead loads and live loads. Horizontal Formwork will be discussed further in Shoring/Reshoring section.

Diagonal bracing must be designed to resist horizontal (lateral) loads applied to the edge of the slab having a magnitude of the larger of:

I. 100 lbs linear ft
II. 2% of the total dead load of the slab

A typical site-built floor form contains the members as shown in the sketch below:

The design of the individual structural members would be based upon satisfying the requirements as dictated by the IBC.

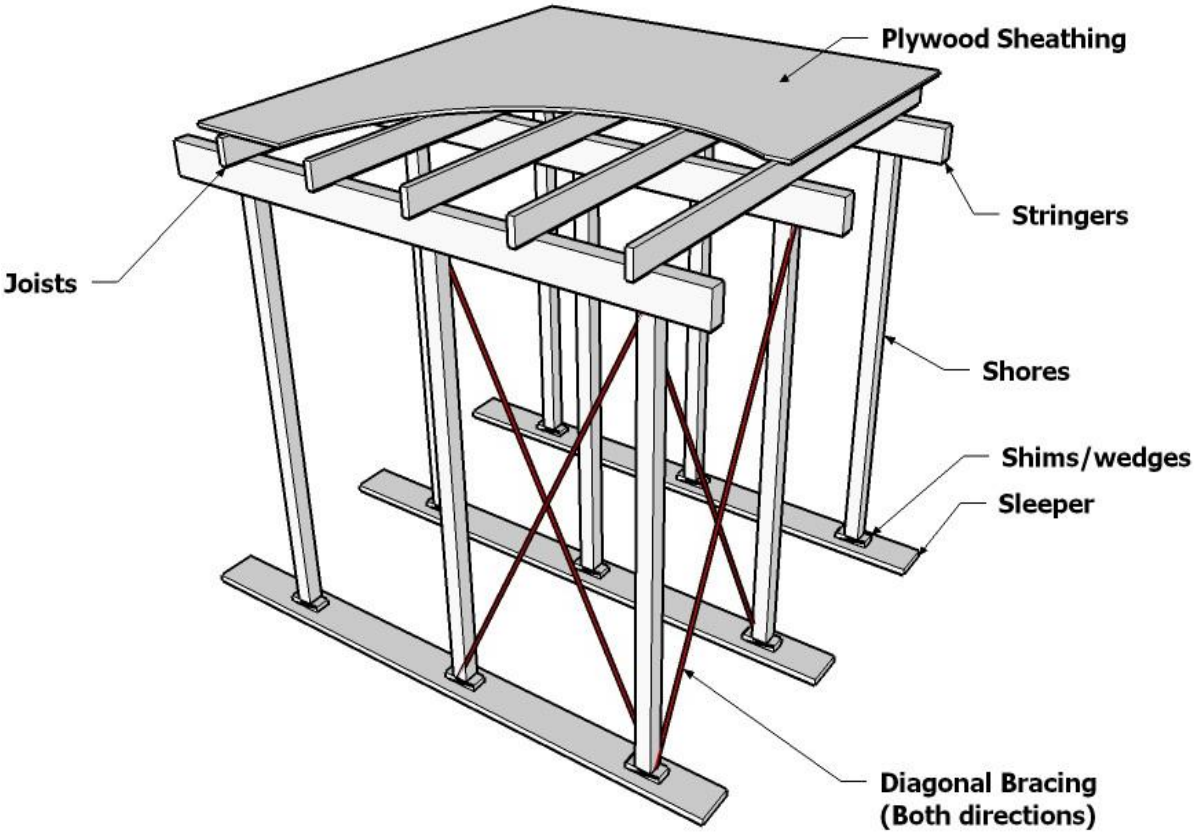

Beam Formwork

Beam forms must be designed and constructed to safely support the vertically- applied dead loads and live loads as described above. A typical site-built beam form contains the members as shown below:

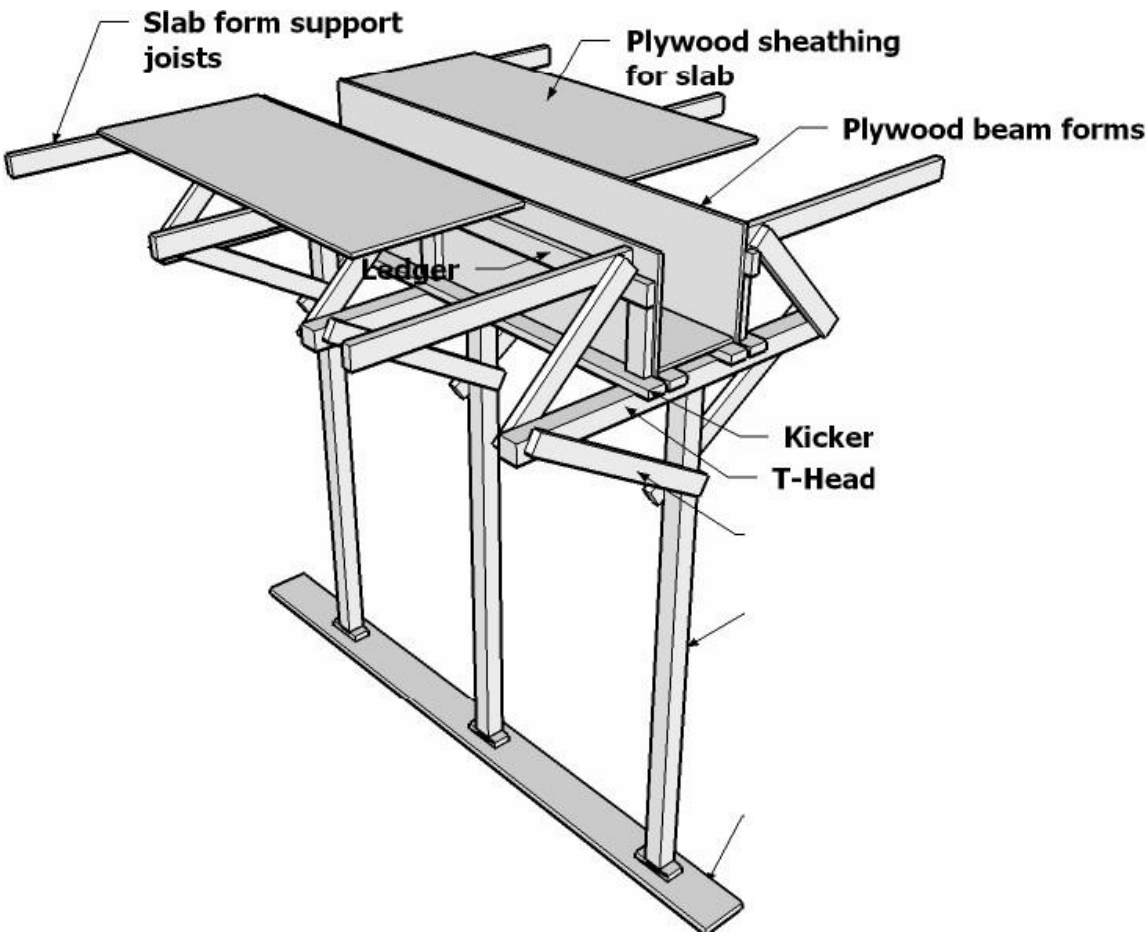

Vertical (Column/Wall) Formwork

Column Forms:

Column forms are especially susceptible to large lateral forces exerted due to high rates of placement of wet concrete. Tighter joints and bottom lateral support is critical.

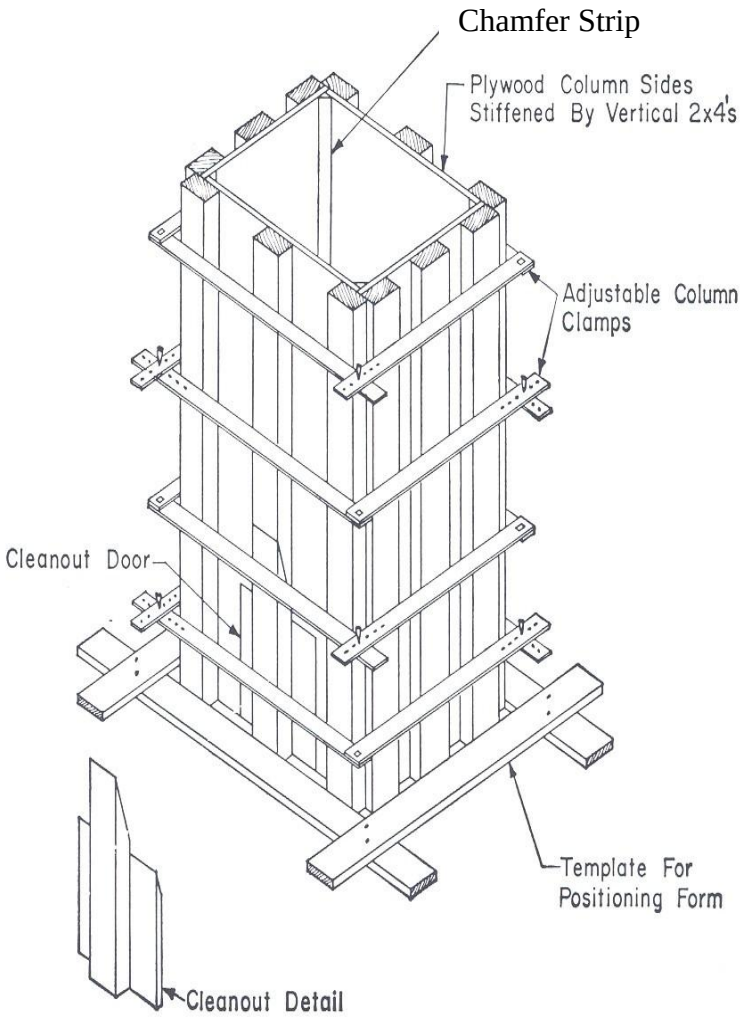

Vertical (Column/Wall) Formwork

Wall Forms:

Wall forms are also susceptible to large lateral forces exerted due to high rates of placement of wet concrete. Tighter joints and bottom lateral support is critical.

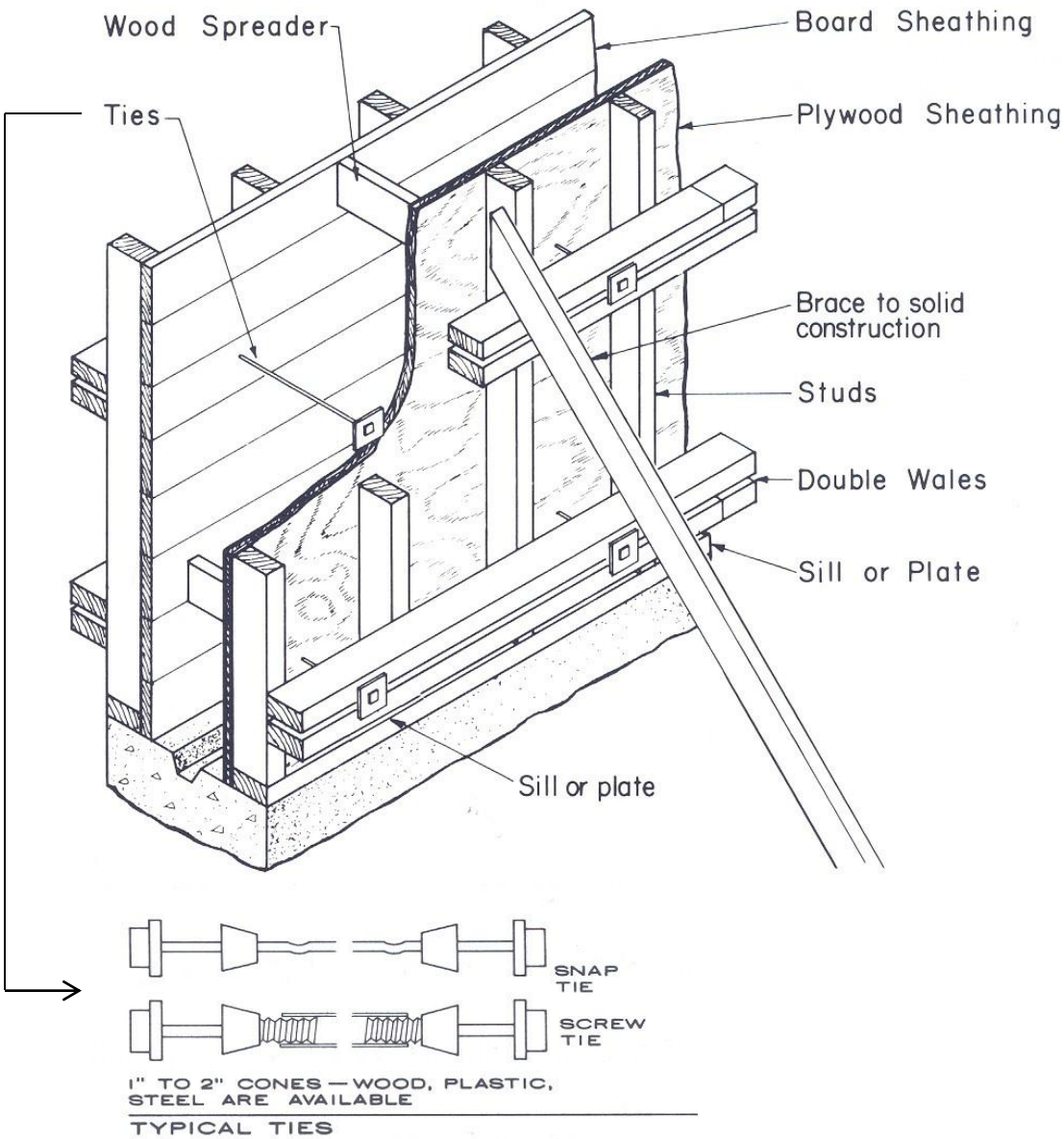

Key Equation and Concepts

Lateral pressure of concrete *: F*ormwork should be designed for the maximum lateral pressure of the newly placed concrete given the following equations.

$$p = wh \text{ (lb/ft}^2\text{)}$$

$$p = \rho gh \text{ (kPa)}$$

where

p = lateral pressure, lb/ft^2 (kPa);
w = unit weight of concrete, lb/ft^3;
ρ = density of concrete, kg/m^3;
g = gravitational constant, 9.81 N/kg; and
h = depth of fluid or plastic concrete from top of placement to point of consideration in form, ft (m).

Example: What is the maximum lateral pressure on the 12 ft high formwork of freshly placed concrete Assume the concrete is 150 lb/ft^3.

pmax = 150 lb/ft^3 * 12 ft
pmax = 1800 lb/ft^2

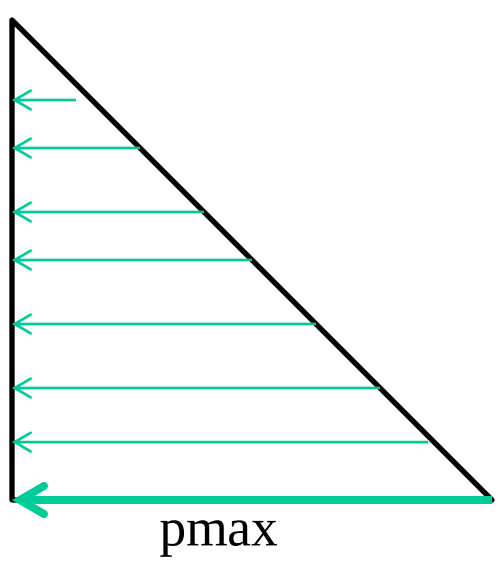

Key Equation and Concepts

ACI Lateral pressure of concrete: *: According to ACI committee 347 F*ormwork can be designed from the following equations.

* Important note is the pressure can not be less than 600*Cw lb/ft*^{2}. Also it doesn't have to be greater than p=wh on the previous page.

ACI Lateral pressure equations:

For concrete having a slump of 7 in. or less and placed with normal internal vibration to a depth of 4 ft or less, formwork can be designed for a lateral pressure as follows,

Where:

pmax = maximum lateral pressure lb/ft2
R = rate of placement, ft/hr
T = temperature of concrete during placing, °F
Cw = unit weight coefficient per Table 2.1
Cc = chemistry coefficient per Table 2.2.

For columns:

pmax = CwCc[150 + 9000R/T]

For walls:

→with a rate of placement of less than 7 ft/h and a placement height not exceeding 14 ft:

pmax = CwCc[150 + 9000R/T]

→with a placement rate less than 7 ft/h where placement height exceeds 14 ft, and for all walls with a placement rate of 7 to 15 ft/h

pmax = CwCc[150 + 43,400/T + 2800R/T]

Table 2.1—Unit weight coefficient C_w

Inch-pound version		SI version	
Unit weight of concrete	C_w	Density of concrete	C_w
Less than 140 lb/ft^3	$C_w = 0.5[1 + (w/145 \text{ lb/ft}^3)]$ but not less than 0.80	Less than 2240 kg/m^3	$C_w = 0.5[1 + (w/2320 \text{ kg/m}^3)]$ but not less than 0.80
140 to 150 lb/ft^3	1.0	2240 to 2400 kN/m^3	1.0
More than 150 lb/ft^3	$C_w = w/145$ lb/ft^3	More than 2400 kg/m^3	$C_w = w/2320$ kg/m^3

Table 2.2—Chemistry coefficient C_c

Cement type or blend	C_c
Types I, II, and III without retarders*	1.0
Types I, II, and III with a retarder	1.2
Other types or blends containing less than 70% slag or 40% fly ash without retarders*	1.2
Other types or blends containing less than 70% slag or 40% fly ash with a retarder*	1.4
Blends containing more than 70% slag or 40% fly ash	1.4

*Retarders include any admixture, such as a retarder, retarding water reducer, retarding midrange water-reducing admixture, or high-range water-reducing admixture (super-plasticizer), that delays setting of concrete.

Problem #1-TS

Given the following information:

- Density of concrete = 150 PCF
- Height of the wall, h = 12'-8"
- Rate of placement, R = 5 ft/hr
- Concrete temperature, T = 80°F

The maximum lateral wall pressure (per ACI 347) is most nearly:

E) 565 PSF
F) 712 PSF
G) 1900 PSF
H) 2000 PSF

Problem #2-TS

You have been tasked to design the formwork for the exterior concrete walls of a structure on a project your company was just awarded. After studying the plans and specifications you determine the following criteria:

- All walls are less than 14 feet in height
- γ_{conc} = 150 pcf
- Type I cement with no retarders

The concrete pours are scheduled to begin in May. The internal concrete temperature is 85° F. You have determined that the maximum lateral pressure (lb/ft^2) on the forms will be 1025 lb/ft^2. Therefore, the rate of placement for the concrete (ft/h) is most nearly:

A) 6
B) 11
C) 16
D) 20

Solution #1 - TS

F) 712 PSF

Since R < 7ft/hr and height of wall < 14 ft, use the following formwork equation:

$$\rho_{max} = C_w C_c\,[150 + 9000R/T]$$
$$= (1)(1)[150 + ((9000x5)/80)]$$
$$= 712 \text{ PSF}$$

Solution #2 - TS

B) 11

Use the equation 2.4 in ACI SP-4, 7th Edition (p.A-15 in ACI 347-04 Guide to Formwork) for walls with a placement rate of 7 ft/h to 15 ft/h.

$$\rho_{max} = C_w C_c\,[150 + 43{,}400/T + 2800R/T]$$

To Find R:

$$R = \{[(\rho_{max} \times T)/2800]/C_w C_c\} - (150T/2800) - 15.5$$

$$R = \{[(1025 \times 85)/2800]/(1)(1)\} - ((150 \times 85)/2800) - 15.5$$

$$R = 11.06 \approx \underline{\mathbf{11.1}}$$